REV.	DESCRIPTION	DATE	DWN	APVD
A	1st edition release.	2024-02-20	Robin	Phoenix

1.6

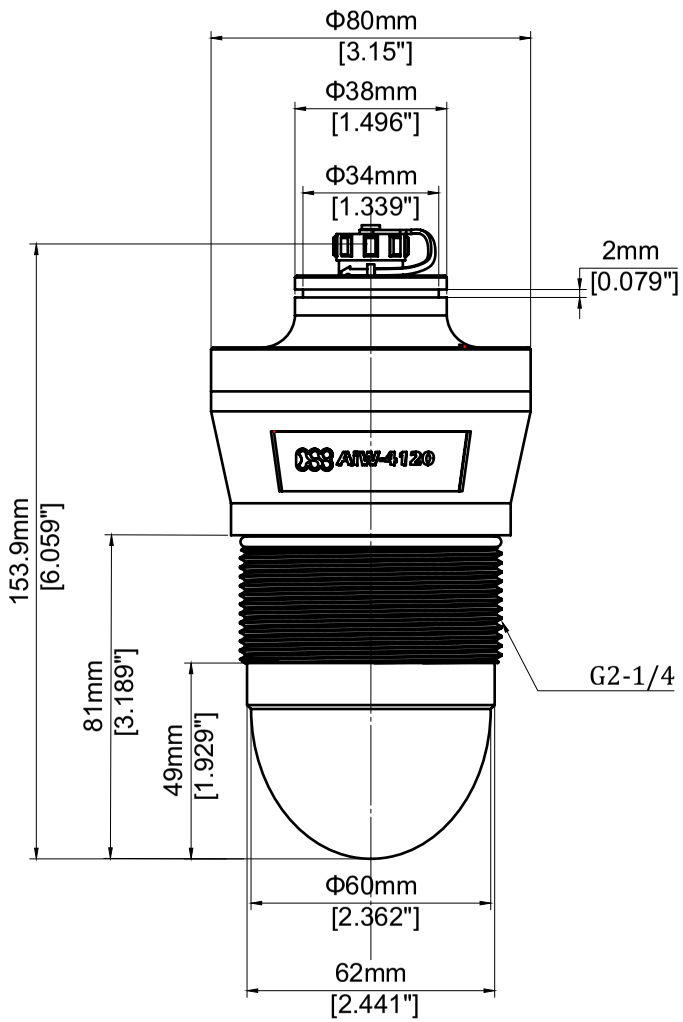

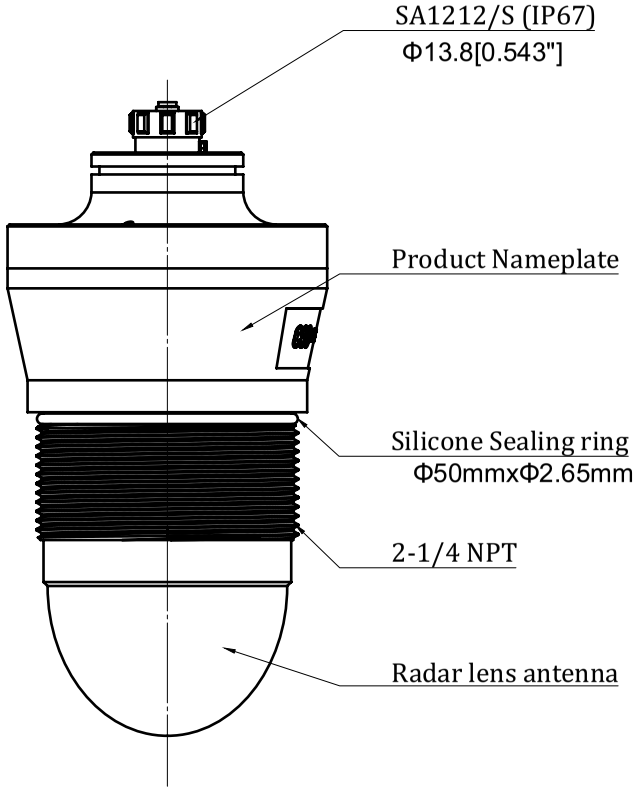

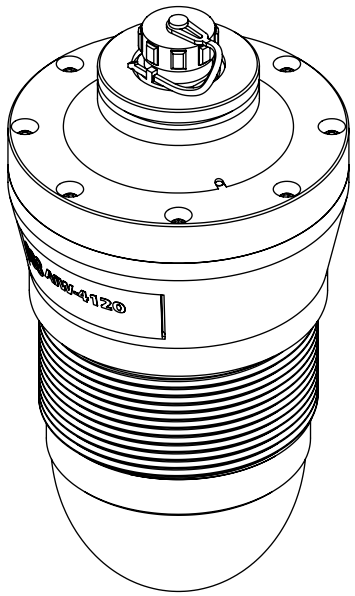

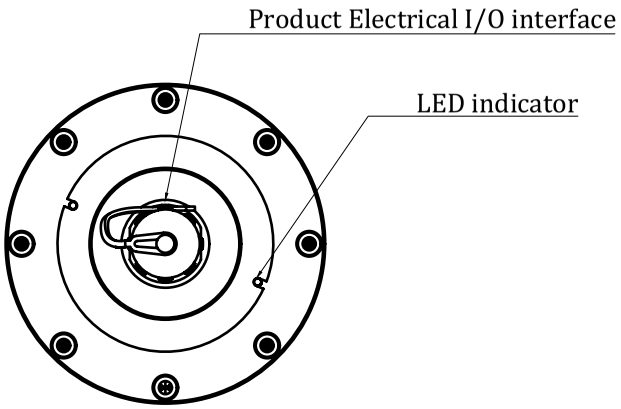

香港昂立電子研究機構有限公司
HONG KONG ANLYSUN ELECTRONIC R&D CO., LTD.
www.anlysun.com
TEL: 86-591-83850480
FAX: 86-591-83850481
EMAIL: master@anlysun.com

THIS DRAWING AND THE COPYRIGHT IN IT ARE THE SOLE PROPERTY OF ANLYSUN ELECTRONIC R&D CO., LIMITED. THE DRAWING AND ITS CONTENTS ARE CONFIDENTIAL AND MAY NOT BE REPRODUCED, DISCLOSED OR USED WITHOUT THE PRIOR WRITTEN CONSENT OF ANLYSUN ELECTRONIC R&D CO., LIMITED. THIS DRAWING IS ALSO PROTECTED BY CHINA DIVISION OF ANLYSUN ELECTRONIC R&D CO., LIMITED.

TITLE: AiW-4120MP-60			
PROJECT/PRODUCT: ANL-6279	PART NAME: TBD		MATERIAL: 黑色POM
REF SCH: N/A	PART NO.: 6279-118-700		QTY: 1
REF PCB: N/A	DRG NO.: 6279-118-700		DIMENSIONS: mm
FILE: 6279-118-700RA			SCALE: 1:1
	SHEET: 1 OF 1	SIZE: A3	REV: A